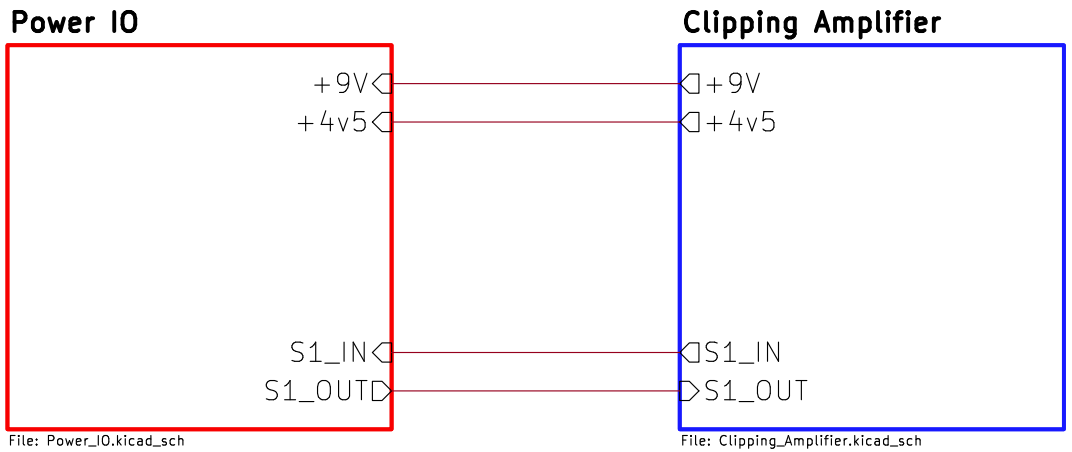

Drawn By: Bryce Redix
Document Number: 01-3301
Blank Electronics

Sheet: /
File: 01-3301 (u Rat).kicad_sch

Title: DOC, SCH, µ Rat

Size: A4	Date: 2026-03-03	**Rev: 1.0**
KiCad E.D.A. 9.0.7		Id: 1/3

Instrument Input

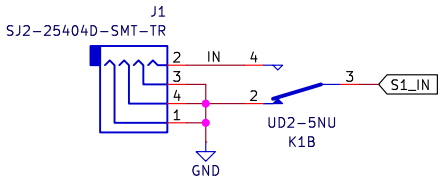

Signal Output

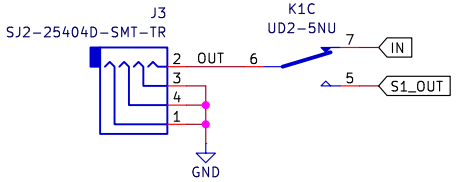

+9V Power Supply

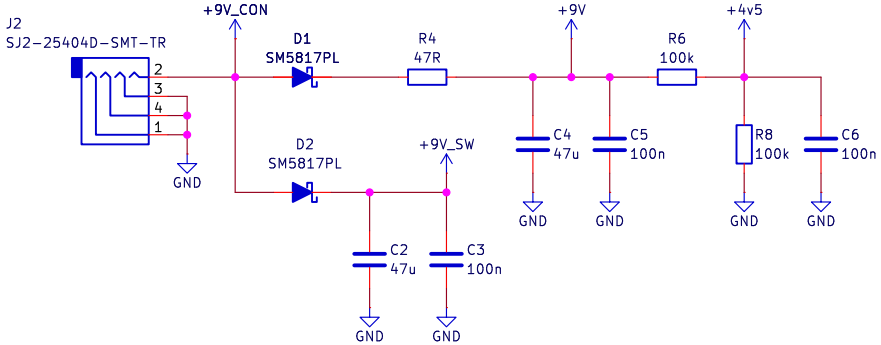

555 Relay Bypass Switch

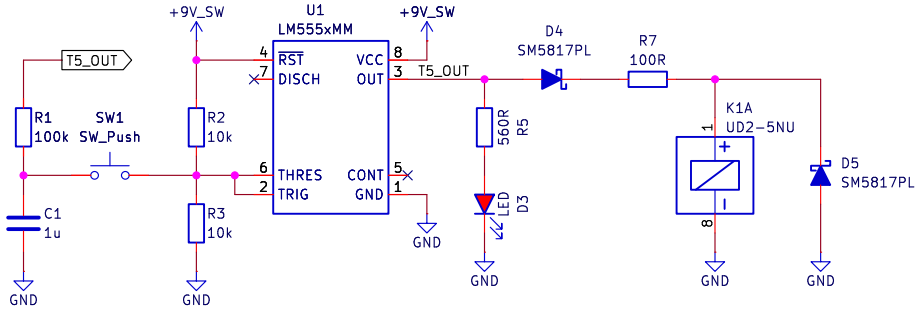

FID1 Fiducial
FID2 Fiducial
FID3 Fiducial
FID4 Fiducial

Drawn By: Bryce Redix
Document Number: 01-3301
Blank Electronics

blank electronics

Sheet: /Power IO/
File: Power_IO.kicad_sch

Title: DOC, SCH, µ Rat

Size: A4	Date: 2026-03-03	**Rev: 1.0**
KiCad E.D.A. 9.0.7		Id: 2/3

Clipping Amplifier

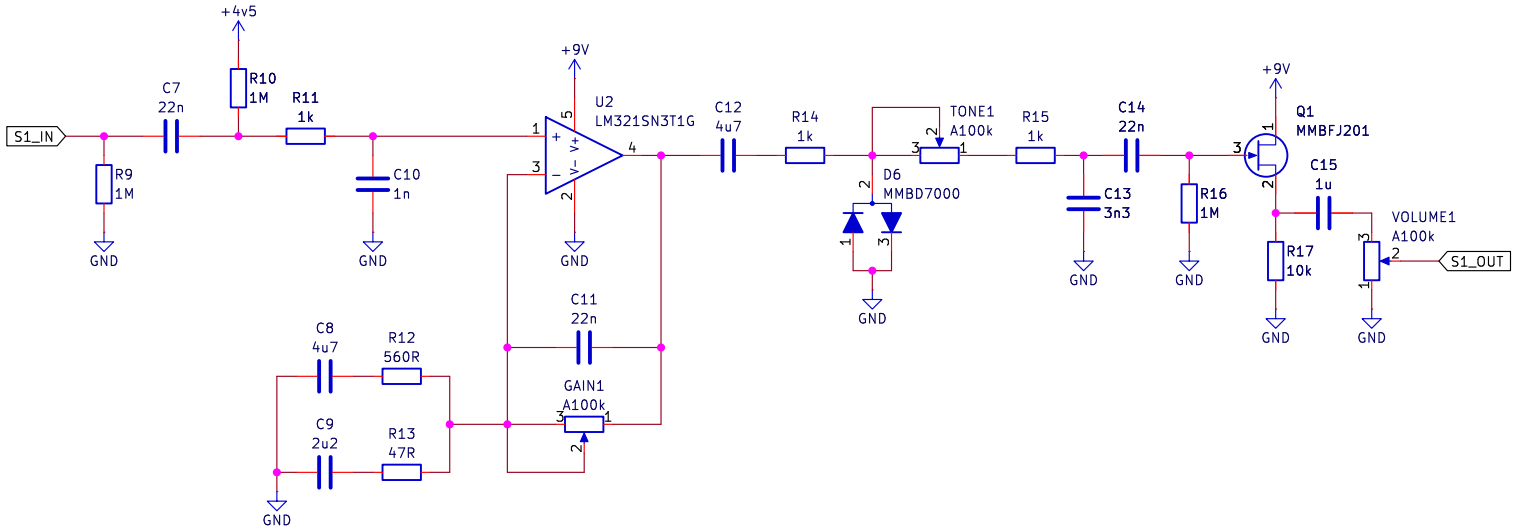

Drawn By: Bryce Redix
Document Number: 01-3301
Blank Electronics

Sheet: /Clipping Amplifier/
File: Clipping_Amplifier.kicad_sch

Title: DOC, SCH, µ Rat

Size: A4	Date: 2026-03-03	**Rev: 1.0**
KiCad E.D.A. 9.0.7		Id: 4/3